307

PLATE NO.1

SHIPS PARTICULARS

LENGTH, OVERALL	180'–0"
LENGTH, BETWEEN PERPENDICULARS	170'–0"
BEAM, MOLDED	37'–0"
BEAM, MOLDED WATERLINE	34'–11¾"
DRAFT, MEAN	12'–0"
DISPLACEMENT, (FULL LOAD, TONS)	935 TONS
MAIN GENERATORS (2), HP	700 HP
AUX GENERATORS (2), CAPACITY	200 kW, 208 VOLTS
EMERG GENERATOR, CAPACITY	50 kW, 208 VOLTS
PROPULSION MOTOR, HP	1200 HP
PROPELLER, DIAMETER	8'–6"
PROPELLER, PITCH	7'–0"

BOOKLET OF GENERAL PLANS
U. S. COAST GUARD CUTTER
PLANETREE – WLB 307

NUMBER & ORDER OF PLATES

1. COVER & TITLE PAGE
2. OUTBOARD PROFILE
3. INBOARD PROFILE
4. DECKHOUSE PLANS
5. UPPER & FORECASTLE DECKS
6. MAIN DECK PLAN
7. SECOND DECK PLAN
8. HOLD LEVEL PLAN

PLATE NO.2

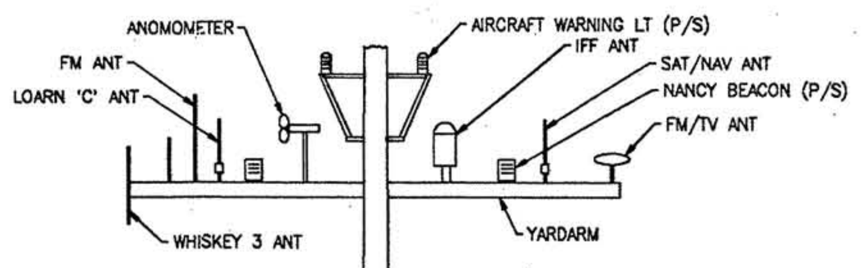
ANOMONETER
AIRCRAFT WARNING LT (P/S)
IFF ANT
FM ANT
SAT/NAV ANT
LOARN 'C' ANT
NANCY BEACON (P/S)
FM/TV ANT
WHISKEY 3 ANT
YARDARM

LOOKING FWD

HEIGHT ABOVE DWL

(DWL 12'-0" ABV BL)

BTM OF FWD ANCHOR LIGHT	33'-10"
BTM OF FWD RANGE LIGHT	39'-3"
BTM OF SIDE LIGHT (P/S)	24'-3"
BTM OF AIRCRAFT WARNING LIGHT (P/S)	62'-8"
BTM OF AFT RANGE LIGHT	57'-3"
BTM OF NANCY BEACON (P/S)	56'-9"
BTM OF WHISTLE LIGHT (P)	50'-4"
BTM OF TOWING LIGHT (UPPER)	51'-9"
BTM OF TOWING LIGHT (LOWER)	45'-9"
BTM OF AID TO NAVIGATION LIGHT, RED (UPPER)	53'-10"
BTM OF AID TO NAVIGATION LT, RED (LOWER)	41'-9"
CL OF AID TO NAVIGATION LT RED/WHITE	48'-4"
BTM OF AFT ANCHOR LIGHT	22'-0"
BTM OF STERN LIGHT	15'-8"
TOP OF RADAR ANT 64	67'-0"

RADAR ANT 64
AN/SRD 22 FM
FM ANT
AIR CRAFT WARNING LT (P/S)
GPS
RADAR ANT 64
35' WHIP ANT (P/S)
23' T/R ANT
AFT RANGE LT
GAFF
NANCY BEACON (P/S)
ATN LT RED (UPPER)
ATN LT RED/WHT
SIG YARDARM
TOWING LT (UPPER)
ATN LT RED (LOWER)
TOWING LT (LOWER)
DF ANT/RADIO BEACON
WHISTLE
FWD RANGE LIGHT
BACKSTAY (P/S)
BULL HORN
SIG FLAG LKR (P/S)
FORE STAY (P/S)
35' TRANS ANT (P/S)
PYRO TECH LKR
SHELTER (P)
SRT/29 FM
STACK
24" SEARCH LT
14" SEARCH LT (P/S)
MAGNETIC COMPASS
FWD ANCHOR LT
AFT ANCHOR LT
FLOOD LT
AFT TOWING LT
JACK STAFF
ENSIGN STAFF
SHIPS BELL
ANCHOR WINDLASS
50 CAL MG MT (P/S)
SIDE LT (P/S)
BOOM REST (CL)
TOWING RAIL
TOWING WINCH
STERN LT
25'-8" MOTOR CARGO BOAT
CARGO BOOM
FOC'SLE DECK
12" CLOSED CHOKED (P/S)
12" CLOSED CHOCK P/S
307
12" CLOSED CHOCK (P/S)
TREE
12" CLOSED CHOKED (P/S)
12" CLOSED CHOCK (P/S)
PORTABLE BULWARK (P/S)
12" CLOSED CHOCK (P/S)
U S COAST GUARD
CHAIN STOP (P/S)
DWL 12'-0" ABV BL
14
13
12
11
10
9
8
7
BILGE KEEL (P/S)
BASELINE
175
168
161
WT BHD
154
147
WT BHD
140
WT BHD
133
126
OT BHD
121
116
OT BHD
110
104
98
92
WT BHD
85
81
74
WT BHD
68
WT BHD
62
56
50
44
OT BHD
37
30
OT BHD
23
16
9
WT BHD
2
0
FP

OUTBOARD PROFILE

PLATE NO.3

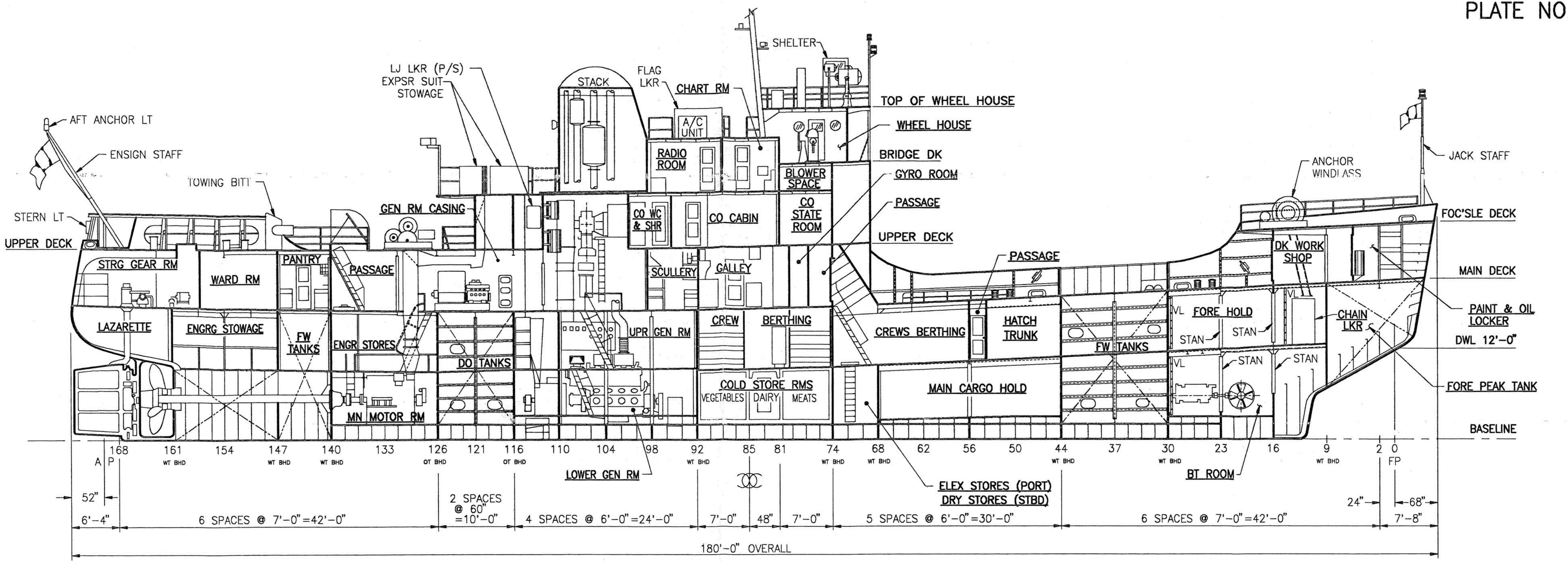
AFT ANCHOR LT
ENSIGN STAFF
TOWING BITT
STERN LT
UPPER DECK
LJ LKR (P/S)
EXPSR SUIT STOWAGE
STACK
FLAG LKR
CHART RM
SHELTER
TOP OF WHEEL HOUSE
WHEEL HOUSE
A/C UNIT
RADIO ROOM
BLOWER SPACE
BRIDGE DK
GYRO ROOM
GEN RM CASING
CO WC & SHR
CO CABIN
CO STATE ROOM
PASSAGE
UPPER DECK
ANCHOR WINDLASS
JACK STAFF
FOC'SLE DECK
STRG GEAR RM
WARD RM
PANTRY
PASSAGE
SCULLERY
GALLEY
PASSAGE
DK WORK SHOP
MAIN DECK
PAINT & OIL LOCKER
LAZARETTE
ENGRG STOWAGE
FW TANKS
ENGR STORES
DO TANKS
UPR GEN RM
CREW
BERTHING
CREWS BERTHING
HATCH TRUNK
FW TANKS
VL
FORE HOLD
STAN
STAN
CHAIN LKR
DWL 12'–0"
VL
STAN
STAN
MN MOTOR RM
COLD STORE RMS
VEGETABLES
DAIRY
MEATS
MAIN CARGO HOLD
FORE PEAK TANK
BASELINE
A P
168
161
WT BHD
154
147
WT BHD
140
WT BHD
133
126
OT BHD
121
116
OT BHD
110
104
98
92
WT BHD
85
81
74
WT BHD
68
WT BHD
62
56
50
44
WT BHD
37
30
WT BHD
23
16
9
WT BHD
2
0
FP
LOWER GEN RM
ELEX STORES (PORT)
DRY STORES (STBD)
BT ROOM
52"
24"
68"
6'–4"
6 SPACES @ 7'–0"=42'–0"
2 SPACES @ 60" =10'–0"
4 SPACES @ 6'–0"=24'–0"
7'–0"
48"
7'–0"
5 SPACES @ 6'–0"=30'–0"
6 SPACES @ 7'–0"=42'–0"
7'–8"
180'–0" OVERALL

INBOARD PROFILE

PLATE NO.4

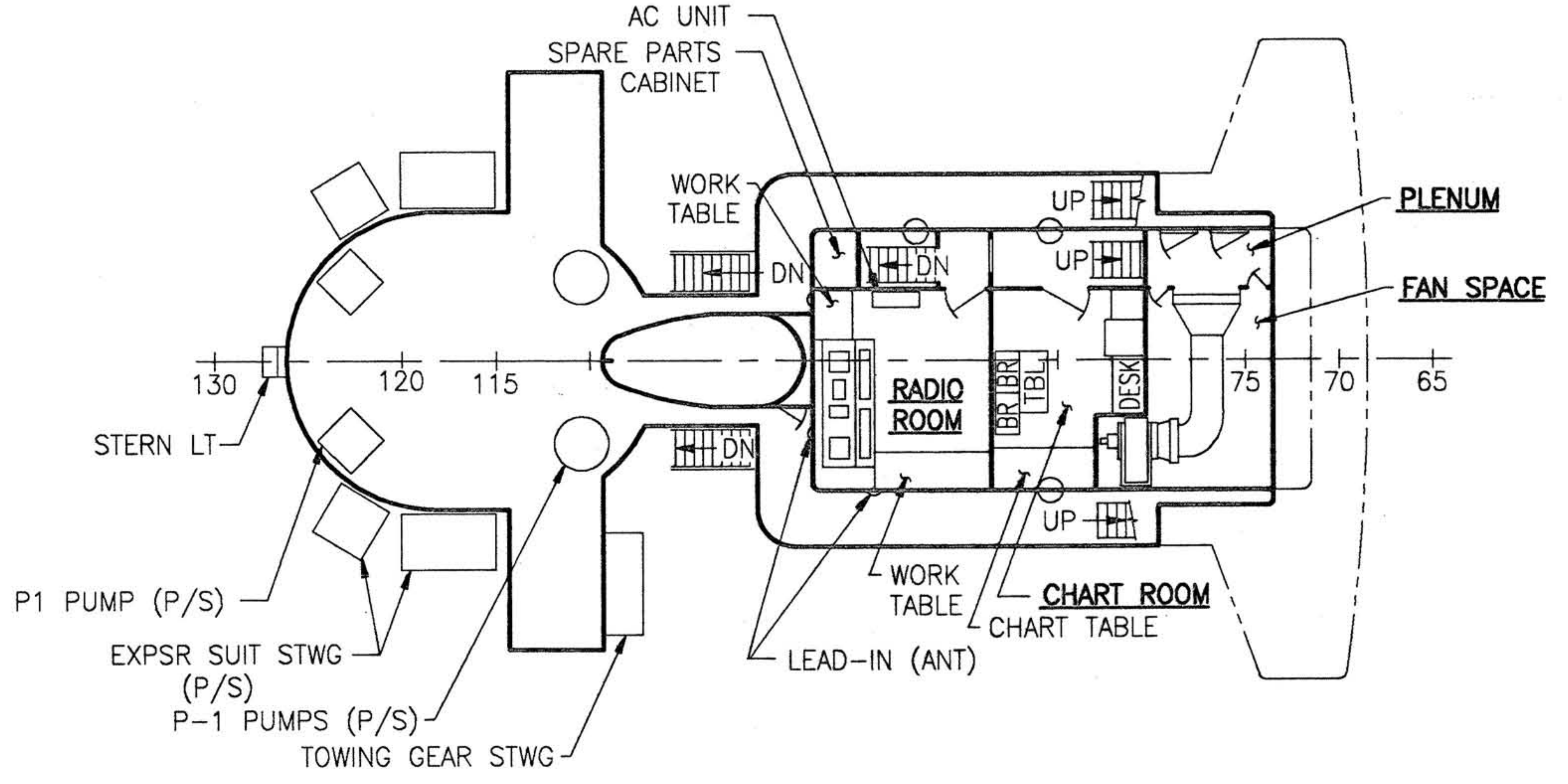
AC UNIT
SPARE PARTS CABINET
WORK TABLE
DN
DN
UP
UP
DN
UP
PLENUM
FAN SPACE
RADIO ROOM
BR BR
TBL
DESK
130
120
115
75
70
65
STERN LT
P1 PUMP (P/S)
EXPSR SUIT STWG (P/S)
P-1 PUMPS (P/S)
TOWING GEAR STWG
LEAD-IN (ANT)
WORK TABLE
CHART ROOM
CHART TABLE

PLAN AT TOP OF UPPER DECK HOUSE

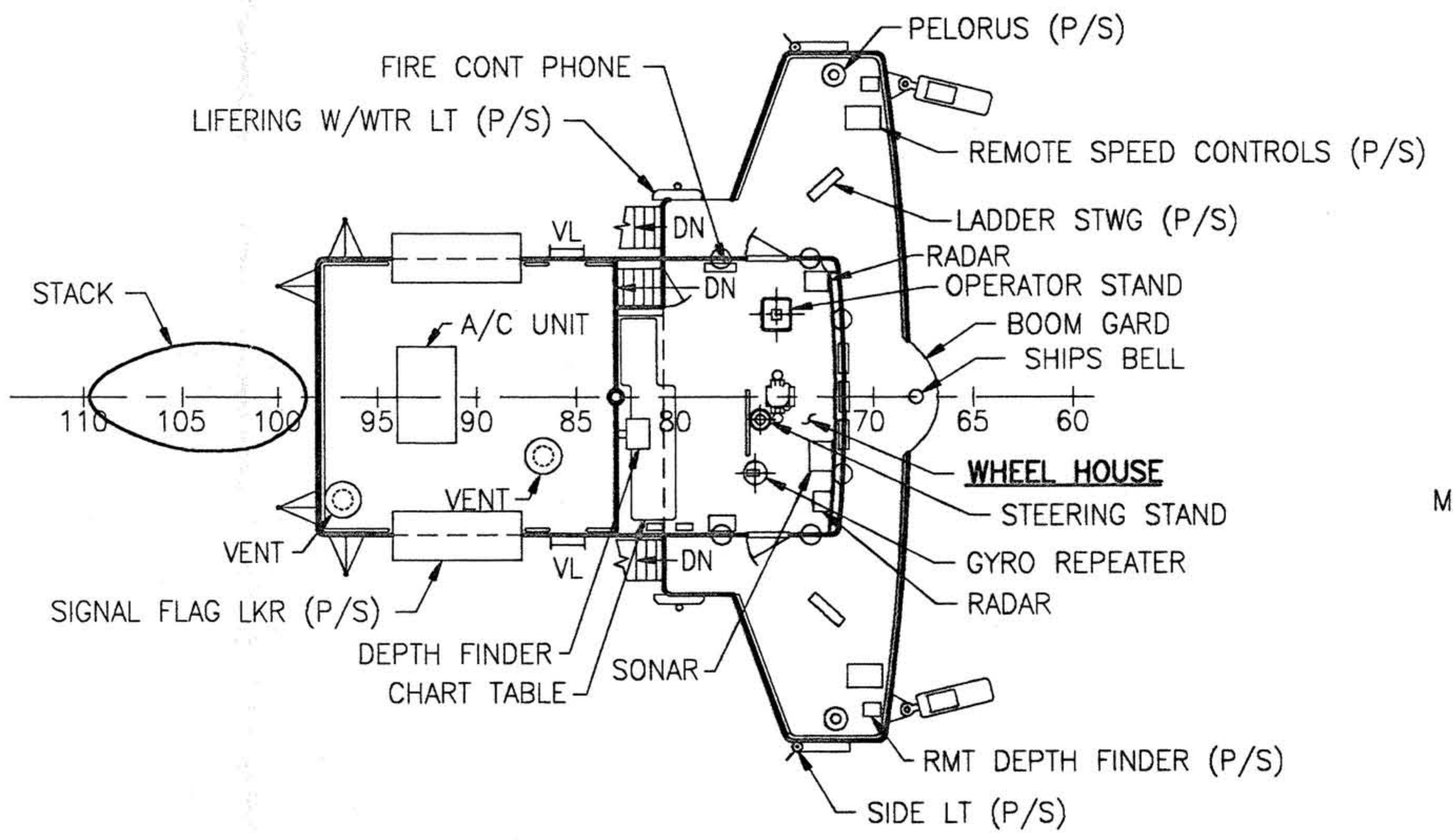
FIRE CONT PHONE
LIFERING W/WTR LT (P/S)
PELORUS (P/S)
REMOTE SPEED CONTROLS (P/S)
LADDER STWG (P/S)
RADAR
OPERATOR STAND
BOOM GARD
SHIPS BELL
STACK
VL
DN
DN
A/C UNIT
110
105
100
95
90
85
80
70
65
60
VENT
VENT
VL
DN
WHEEL HOUSE
STEERING STAND
GYRO REPEATER
RADAR
SIGNAL FLAG LKR (P/S)
DEPTH FINDER
CHART TABLE
SONAR
RMT DEPTH FINDER (P/S)
SIDE LT (P/S)

PLAN OF BRIDGE

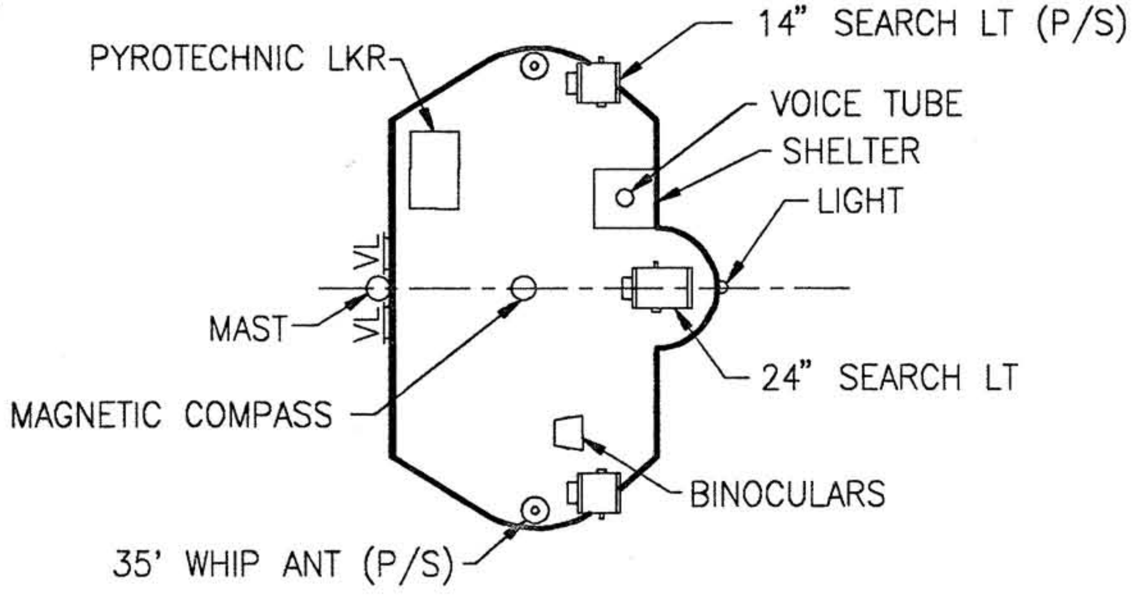
PYROTECHNIC LKR
14" SEARCH LT (P/S)
VOICE TUBE
SHELTER
LIGHT
VL
VL
MAST
MAGNETIC COMPASS
24" SEARCH LT
BINOCULARS
35' WHIP ANT (P/S)

PLAN AT TOP OF WHEEL HOUSE

PLATE NO.5

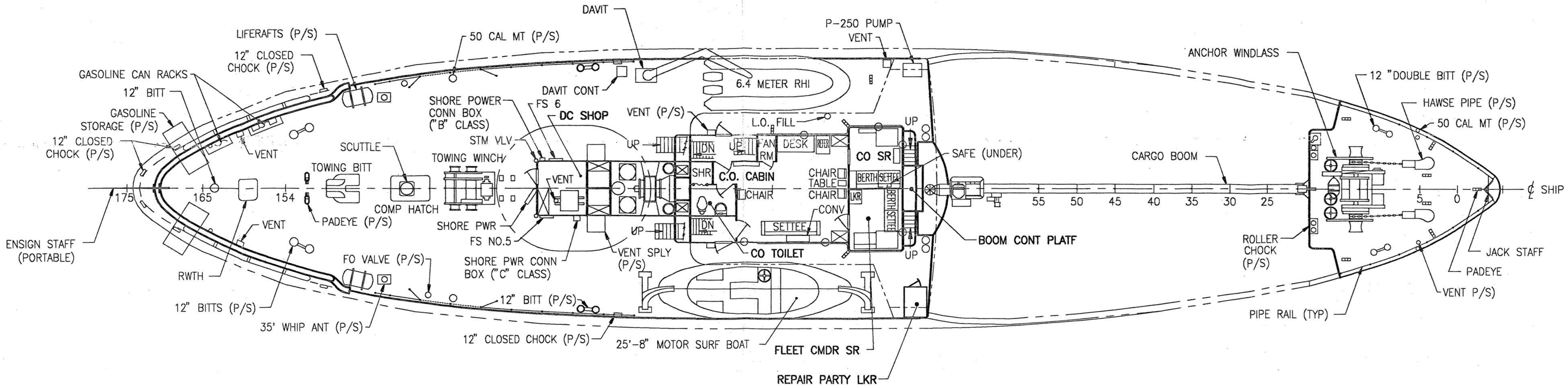
DAVIT
P-250 PUMP
VENT
LIFERAFTS (P/S)
50 CAL MT (P/S)
12" CLOSED CHOCK (P/S)
GASOLINE CAN RACKS
12" BITT
GASOLINE STORAGE (P/S)
12" CLOSED CHOCK (P/S)
VENT
DAVIT CONT
6.4 METER RHI
SHORE POWER CONN BOX ("B" CLASS)
FS 6
DC SHOP
VENT (P/S)
L.O. FILL
ANCHOR WINDLASS
12 "DOUBLE BITT (P/S)
HAWSE PIPE (P/S)
50 CAL MT (P/S)
SCUTTLE
STM VLV
TOWING WINCH
TOWING BITT
UP
DN
FAN RM
DESK
CO SR
SAFE (UNDER)
CARGO BOOM
SHR
C.O. CABIN
CHAIR
TABLE
CHAIR
CHAIR
BERTH
SETTEE
LKR
BERTH
SETTEE
VENT
175
165
154
COMP HATCH
PADEYE (P/S)
55
50
45
40
35
30
25
5
0
¢ SHIP
SHORE PWR
VENT
CONV
SETTEE
BOOM CONT PLATF
ENSIGN STAFF (PORTABLE)
FS NO.5
UP
DN
CO TOILET
UP
ROLLER CHOCK (P/S)
JACK STAFF
PADEYE
VENT SPLY (P/S)
FO VALVE (P/S)
SHORE PWR CONN BOX ("C" CLASS)
RWTH
VENT P/S
12" BITTS (P/S)
12" BITT (P/S)
PIPE RAIL (TYP)
35' WHIP ANT (P/S)
12" CLOSED CHOCK (P/S)
25'-8" MOTOR SURF BOAT
FLEET CMDR SR
REPAIR PARTY LKR

PLAN OF UPPER AND FORECASTLE DECKS

PLATE NO.6

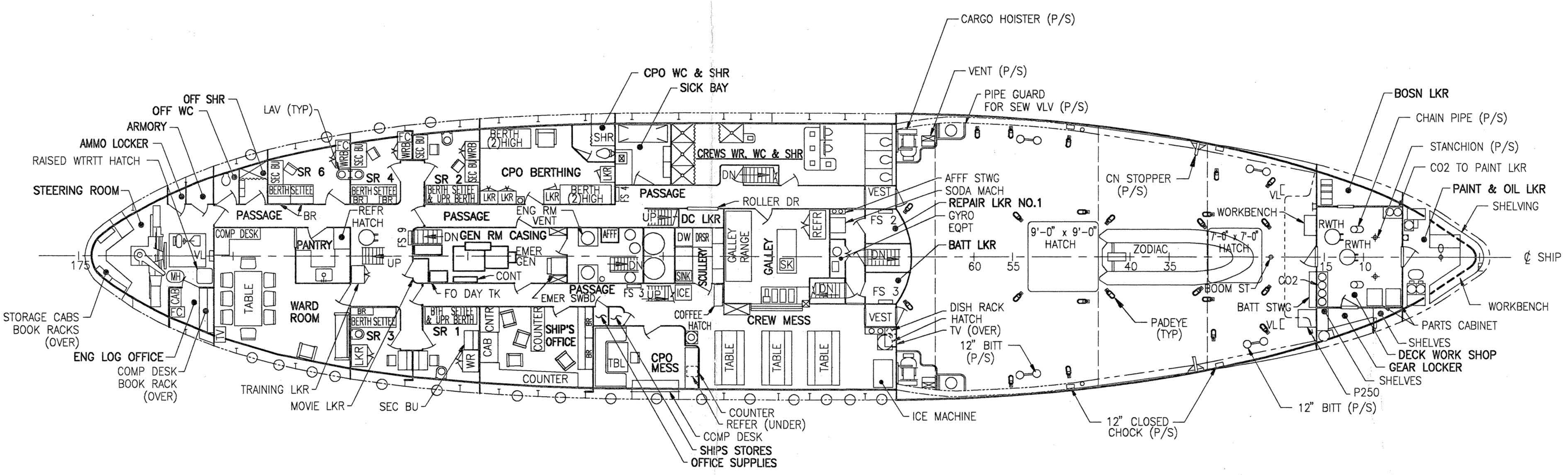
CARGO HOISTER (P/S)
VENT (P/S)
PIPE GUARD FOR SEW VLV (P/S)
CPO WC & SHR
SICK BAY
OFF SHR
OFF WC
LAV (TYP)
ARMORY
AMMO LOCKER
RAISED WTRTT HATCH
STEERING ROOM
STORAGE CABS
BOOK RACKS (OVER)
ENG LOG OFFICE
COMP DESK
BOOK RACK (OVER)
TRAINING LKR
MOVIE LKR
SEC BU
SR 6
SR 4
SR 2
SR 3
SR 1
BERTH SETTEE
SEC BU
WRB
FC
BR
LKR
PASSAGE
COMP DESK
PANTRY
REFR HATCH
UP
WARD ROOM
TABLE
MH
CAB
FC
TV
VL
175
FS 9
DN
GEN RM CASING
EMER GEN
CONT
FO DAY TK
BTH SETTEE & UPR BERTH
BERTH SETTEE & UPR BERTH
CAB
CNTR
COUNTER
SHIP'S OFFICE
WR
CPO BERTHING
BERTH (2) HIGH
SHR
ENG RM VENT
AFFF
EMER SWBD
PASSAGE
FS 3
FS 4
UP
DN
ICE
SINK
CPO MESS
TBL
CREWS WR, WC & SHR
DC LKR
DW
DRSR
SCULLERY
GALLEY RANGE
GALLEY
SK
REFR
ROLLER DR
COFFEE HATCH
CREW MESS
TABLE
COUNTER
REFER (UNDER)
COMP DESK
SHIPS STORES
OFFICE SUPPLIES
VEST
FS 2
FS 3
AFFF STWG
SODA MACH
REPAIR LKR NO.1
GYRO EQPT
BATT LKR
DISH RACK
HATCH
TV (OVER)
12" BITT (P/S)
ICE MACHINE
9'-0" x 9'-0" HATCH
60
55
CN STOPPER (P/S)
ZODIAC
40
35
PADEYE (TYP)
12" CLOSED CHOCK (P/S)
WORKBENCH
7'-0" x 7'-0" HATCH
BOOM ST
VL
CO2
BATT STWG
15
10
12" BITT (P/S)
BOSN LKR
CHAIN PIPE (P/S)
STANCHION (P/S)
CO2 TO PAINT LKR
PAINT & OIL LKR
SHELVING
RWTH
RWTH
℄ SHIP
WORKBENCH
PARTS CABINET
SHELVES
DECK WORK SHOP
GEAR LOCKER
SHELVES
P250

MAIN DECK PLAN